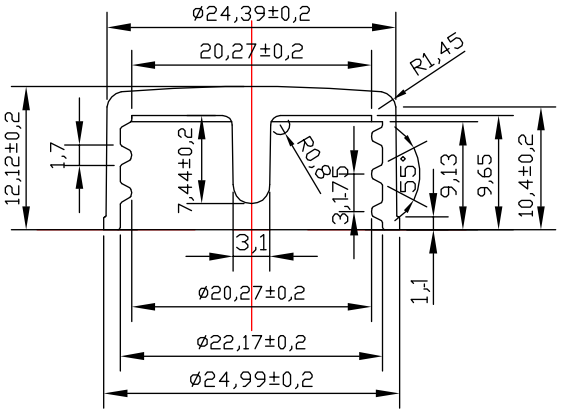

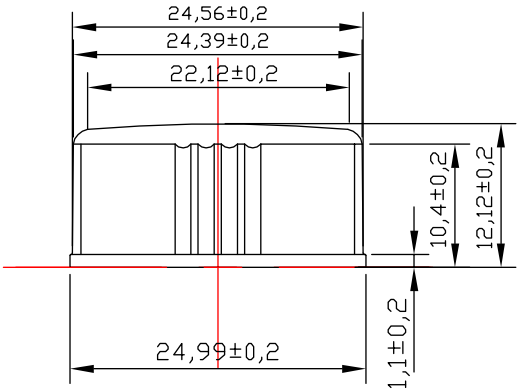

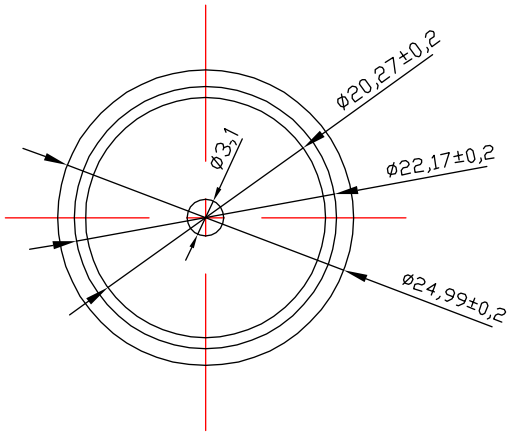

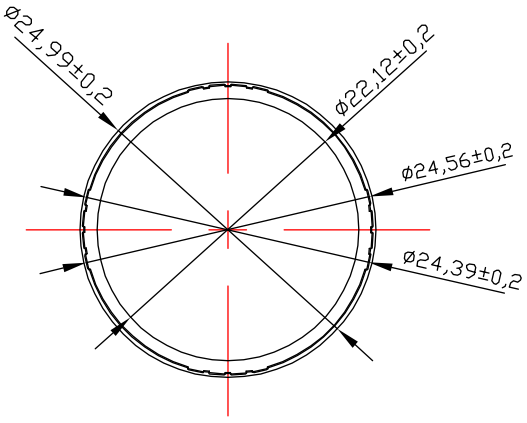

CITADEL PACKAGING
CitadelPackaging.com · 208-550-3393

CL3673-MD

MATERIAL	Phenolic	UNIT	mm	22-400
DATE	2013-09-04		SCALE	1:1

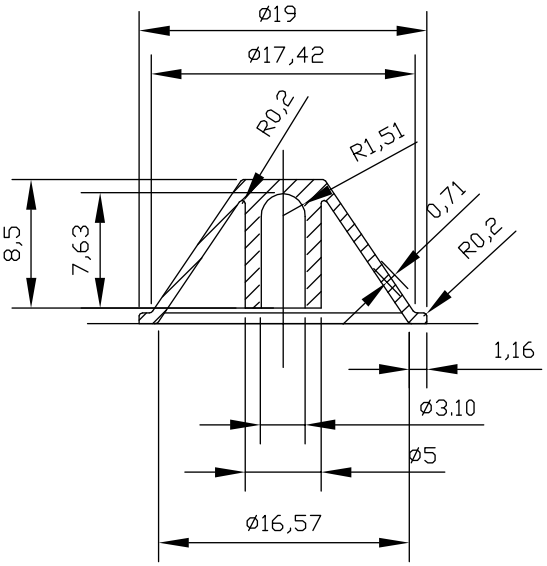

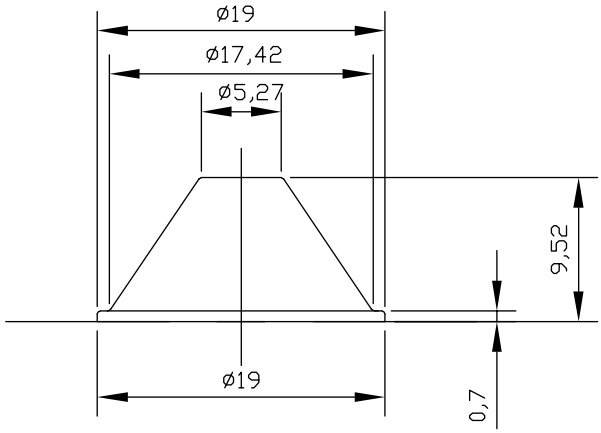

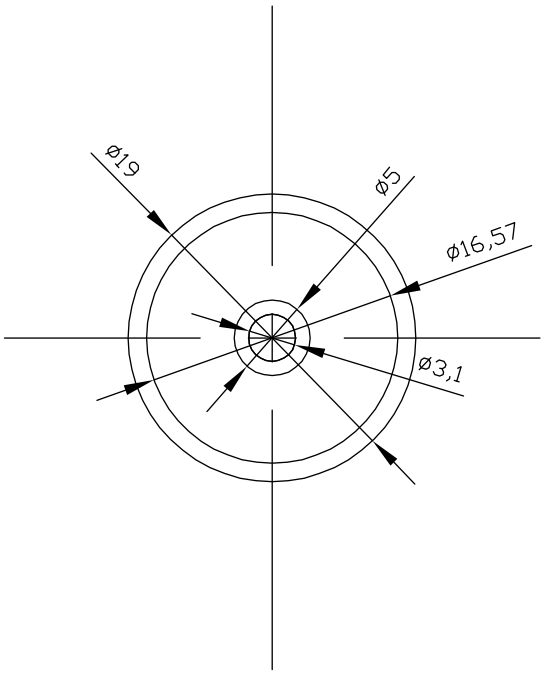

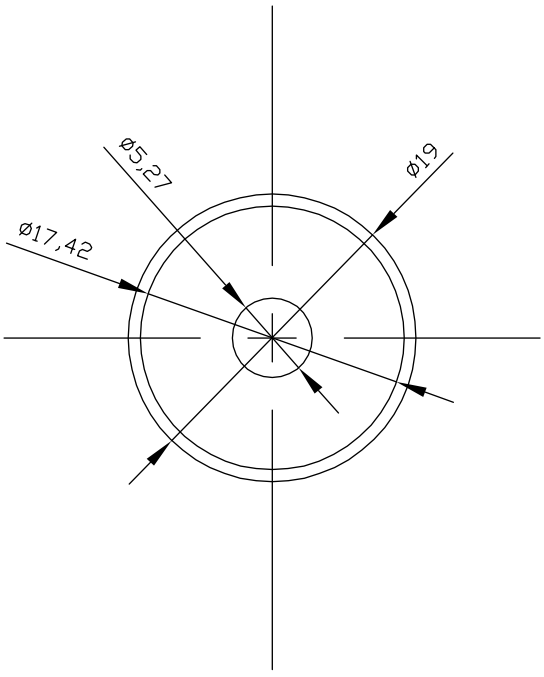

McKernan
PACKAGING CLEARING HOUSE®
QUALITY DISCOUNT PACKAGING

DR-34955

MATERIAL	LDPE	UNIT	mm	ITEM	22-400
DATE	2013-09-04		SCALE	1:1	