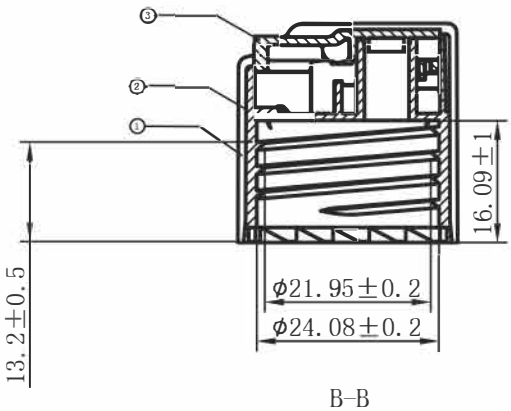

B–B

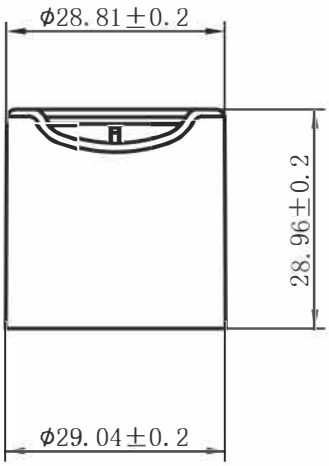

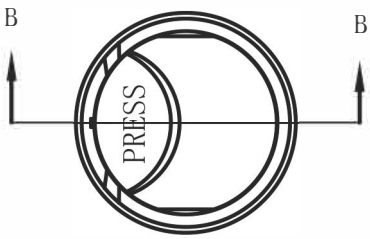

Note:

1.material: ABS;weight: 2.38g

2.material: PP;weight: 3.88g

3.material: PP;weight: 0.88g

2019.04.13

Finish: 24/410

Nom. Capacity		Drawn	Date	Part Number	CL5026-MD	Scale
O.F. Capacity		Checked	Date	Material	PP-ABS	1: 1
Weight	7.14±1g	Approved	Date	CITADEL PACKAGING CitadelPackaging.com · 208-880-3393		