Change in drawing is determined by our company without the futher notice.

REVISION RECORD		
REV	DESCRIPTION	DESIGN

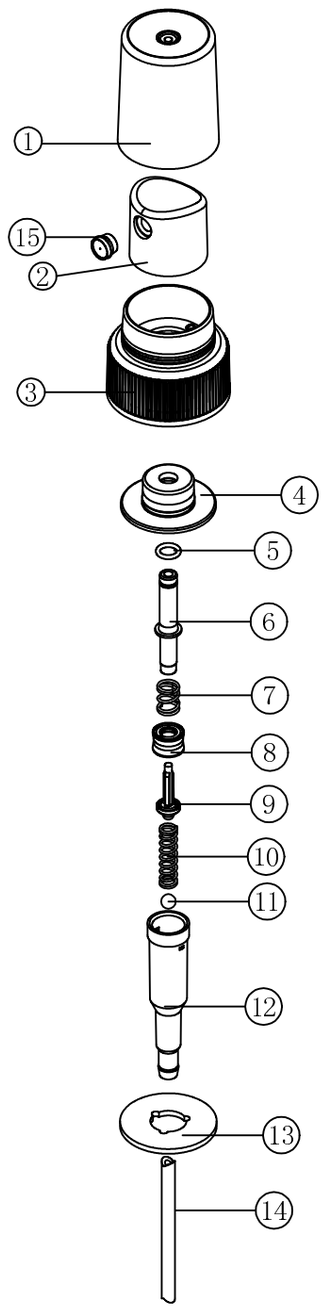

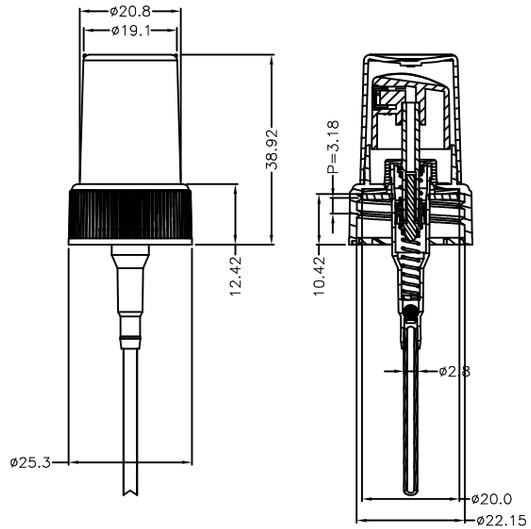

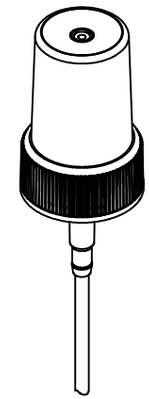

output:0.18±0.02CC

NO	NAME	DRAWING NO	QT'Y	MATERIAL	WEIGHT	REMARKS
15	Nozzle	TR301/223	1	POM/90-44	0.05g	
14	Dip tube	TR301/025	1	LDPE		
13	Gasket	TR301/023	1	PE	0.11g	
12	Pump housing	TR301/102	1	PP/RE420M0	0.45g	
11	Ball valve	TR301/019	1	Glass	0.04g	
10	Spring	TR301/017	1	SUS304	0.18g	
9	Spring base	TR301/004	1	POM/90-44	0.071g	
8	Piston	TR301/002	1	LLDPE/218W	0.064g	
7	Spring	TR301/018	1	SUS304	0.1g	
6	Piston bar	TR301/106	1	POM/90-44	0.23g	
5	O Ring	TR301/027	1	NBR	0.01g	
4	Connection cap	TR301/010	1	PP/HKR102	0.3g	
3	Closure	TR301/262	1	PP/HKR102	1.8g	
2	Actuator	TR301/128	1	PP/RE420M0	0.96g	
1	Transparent cover	TR300/017	1	PP/RE420M0	1.4g	

MM / (INCH) GRADE	FINE	MEDIUM	COARSE
1-4	±0.05	±0.10	±0.30
4-16	±0.07	±0.20	±0.50
16-63	±0.10	±0.30	±0.70
63-250	±0.20	±0.50	±1.20
250-1000	±0.30	±0.80	±2.00

Design: 2017.10.18
Examine:
Approval:
Material:
Weight:
Qt'y:

CITADEL PACKAGING
CitadelPackaging.com · 208-550-3393

22/400

PART NO. FS9401-MD

SCALE:
REV: A0
SIZE: A4
SHEET: 1/1

8 7 6 5 4 3 2 1

H G F E D C B A