REVISIONS			
NO.	BY	DESCRIPTION	DATE
A1	CML	DETAIL A & B REMOVED	SEPT 13/21
B1	CML	'I' DIM SHOWN	SEPT 16/21

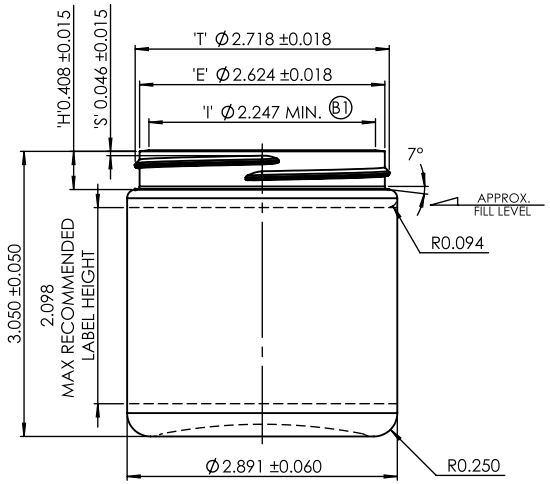

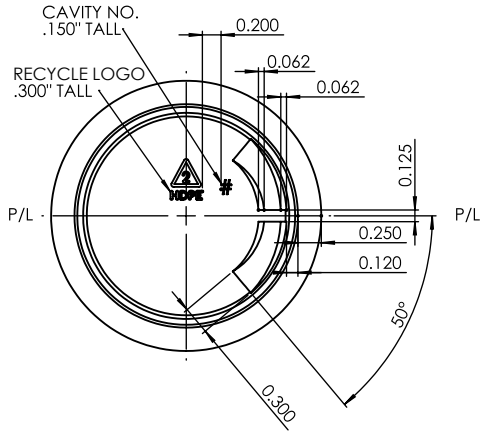

TEMPORARY DRAWING-NOT RELEASED FOR PRODUCTION

THIS IS A SUGGESTED DESIGN FOR CUSTOMER APPROVAL.
FINAL SIZES AND VOLUME ARE SUBJECT TO MOULDING
SPECIFICATIONS AND PRODUCTION QUALIFICATIONS.

DRAWING CHECKED SPECIFICALLY FOR:
NECK FINISH .....
WEIGHT .....
CAPACITY .....
MATERIAL .....
SPECIAL REQUESTS .....

PRODUCT DESIGN TO BE APPROVED BEFORE MOULD CAVITIES ARE MACHINED.

APPROVED BY .....

DATE .....

This drawing subject to standard industry tolerances S.P.I.

CITADEL PACKAGING
CitadelPackaging.com · 208-550-3393

CAPACITY TO FILL LEVEL: 236ml ±7

OVERFLOW CAPACITY: 285ml ±7

NECK FINSH: M70-400

WEIGHT: 27g ±2

DRAWN BY: CML

SCALE: 1:1 DATE: SEPT 1/21

DESC. 8oz Jar

DRAWING NO. PJ3421-MD

BOTTLE MAT'L: HDPE

MOULD NO.

CAD NAME:PD/43702-8